OX DRIVE BATTERY

Powered by **Electric GT**

ENERGY MODULES	POWER MODULES

OX DRIVE BATTERY

Powered by **Electric GT**

Overview

The OX-Drive Battery line represents the core energy source for Powered by Electric GT's new product lines. OXD Batteries are an ideal solution for Automotive Aftermarkets, Electric Vehicles and Energy Storage Systems. The Ox-Drive Battery is available in both Energy and Power module formats consisting of nickel manganese cobalt Lithium Ion chemistry. These are extremely high-quality new battery modules offered by Electric GT. OX-Drive Modules are designed to offer application flexibility, affordability, and availability.

OX-Drive Energy **Battery**

The OX-Drive Energy (OXDE) modules are a compact modular format with versatile fitment dimensions, alternative voltage configurations, robust construction, advanced battery chemistry, and OEM level of safety and protection.

Density and FItment: Battery density is comparable to the Tesla 5.3kWh Module and a granular packaged size (approximately shoe box size vs dresser drawer) which allows for a wide range of new battery fitment possibilities. Modules are constructed with built in fusing, venting and short circuit device, the OX-Drive ENERGY Modules offer OEM level safety and protection.

Performance: OXDE offers excellent performance and safety over an even wider range of SOC and Temperatures. These modules perform very well in challenging cold environments and under heavy demand. The modules will accept full DC Fast Charging currents all the way to 0℃(32℉). Max Discharge current is available down to 20% SOC at moderate temps (15℃/59℉).

OX-Drive **Power Battery**

The OX-Drive Power (OXDP) modules are a solid go-to battery both for providing power dense solutions and custom configurations. They are even more configurable in nature than the OXDE Modules allowing for a wider use and application.

Density and FItment: These Power Pouch cell format modules are stackable and custom configurable enabling “battery paralleling” to occur at the CELL level. Battery Parallelling cannot be achieved with other or “used” OEM modules. The configurable nature of these modules allows for even more custom fitment options than the OXDE.

Performance: OXDP modules have a much higher rated output for performance applications than the OXDE. The high pulse discharge rates of 8C (and 10C coming soon) are perfect for high-performance Tesla Motor Swaps or top-end Cascadia applications. The cell stacking allows for unique configurations for lower voltage uses (ie Hyper 9 or HPEVs 96-144v systems). Think of these as the solution for “race gas” to supercharge your EV project,

See our application examples to assist in finding the right configuration.

OX-DRIVE BATTERY

MODULE CONFIGURATION INDEX

	Type	Energy	Voltage	Config	Order Type
1)	OXDE	2.2kWh	22.2vdc	6s	Standard
2)	OXDE	2.2kWh	14.8vdc	4s	Standard
3)	OXDP	2.66kWh	44.4vdc	12s	Standard
4)	OXDP	2.66kWh	22.2vdc	6s	Standard
5)	OXDP	2.66kWh	14.8vdc	4s	Standard
6)	OXDP	2.66kWh	11.1vdc	3s	Standard
7)	OXDP	2.66kWh	7.4vdc	2s	Standard
8)	OXDP	3.55kWh	59.2vdc	16s	Spec Order
9)	OXDP	3.55kWh	29.6vdc	8s	Spec Order
10)	OXDP	3.55kWh	14.8vdc	4s	Spec Order
11)	OXDP	3.55kWh	7.4vdc	2s	Spec Order
12)	OXDP	5.3kWh	88.8vdc	24s	Spec Order
13)	OXDP	5.3kWh	44.4vdc	12s	Spec Order
14)	OXDP	5.3kWh	29.6vdc	8s	Spec Order
15)	OXDP	5.3kwh	22.2vdc	6s	Spec Order
16)	OXDP	5.3kwh	14.8vdc	4s	Spec Order
17)	OXDP	5.3kwh	11.1vdc	3s	Spec Order

OX DRIVE ENERGY

Battery Pack Application Examples

OxDrive ENERGY 2.22kWh

Battery Pack Configuration Options

Energy (kWh)	***# Modules***	***# Cells***	***Module Ah***	***Mod Voltage (nominal/ Max)***	***Voltage nom/max***	***Peak Amps***	***Lbs/Kg***	***Motors Compatibility***
96.1	43	172	151	14.8 / 17.2	636 / 739	600	1075 / 482	Casciadia
80.5	36	144	151	14.8 / 17.2	532 / 619	600	900 / 404	Casciadia
65.7	29	174	102	22.2 / 25.8	643 / 748	410	725 / 325	Casciadia
54.3	24	144	102	22.2 / 25.8	532 / 619	410	600 / 269	Casciadia
53.6	24	96	151	14.8 / 17.2	355 / 412	600	600 / 269	Tesla SDU
46.9	21	84	151	14.8 / 17.2	310 / 361	600	525 / 236	Tesla SDU
36.2	16	96	102	22.2 / 25.8	355 / 412	410	400 / 180	
31.7	14	84	102	22.2 / 25.8	310 / 361	410	350 / 157	
22.3	10	40	151	14.8 / 17.2	148 / 172	600	250 / 112	Hyper9HV

OX DRIVE **POWER**

Battery Pack Application Examples

OxDrive POWER 2.66kWh

Battery Pack Configuration Options

Energy (kWh)	*Modules*	*Num of Cells*	*Module Ah*	*Mod Voltage (nominal/ Max)*	*Voltage nom/max*	*Peak Amps*	*Lbs/Kg*	*Motors to Match*
114.6	43	172	180	14.8 / 16.8	636 / 722	1440	1419 / 645	Cascadia
95.9	36	144	180	14.8 / 16.8	532 / 604	1440	1188 / 540	Cascadia
85.2	32	96	240	11.1 / 12.6	355 / 403	1800	1056 / 480	Tesla
77.3	29	174	120	22.2 / 25.2	643 / 730	960	957 / 435	Cascadia
74.6	28	84	240	11.1 / 12.6	310 / 352	1800	924 / 420	Tesla
63.9	24	144	120	22.2 / 25.2	532 / 604	960	792 / 360	Cascadia
63.9	24	96	180	14.8 / 16.8	355 / 403	1440	792 / 360	Tesla
55.9	21	84	180	14.8 / 16.8	310 / 352	1440	693 / 315	Tesla
53.3	20	40	360	7.4 / 8.4	148 / 168	1800	660 / 300	Hyper 9HV
42.6	16	96	120	22.2 / 25.2	355 / 403	960	528 / 240	Tesla
40.0	15	30	360	7.4 / 8.4	111 / 126	1800	495 / 225	Hyper 9IS
37.3	14	168	60	44.4 / 50.4	621 / 705	480	462 / 210	Cascadia
37.3	14	84	120	22.2 / 25.2	310 / 352	960	462 / 210	Tesla
34.6	13	39	240	11.1 / 12.6	144 / 163	1800	429 / 195	Hyper 9HV
32.0	12	144	60	44.4 / 50.4	532 / 604	480	396 / 180	Cascadia
26.6	10	40	180	14.8 / 16.8	148 / 168	1440	330 / 150	Hyper 9HV
26.6	10	30	240	11.1 / 12.6	111 / 126	1800	330 / 150	Hyper 9IS
21.3	8	32	180	14.8 / 16.8	118 / 134	1440	264 / 120	Hyper 9IS

OX DRIVE **POWER**

Battery Pack Application Examples

OxDrive POWER 3.55 kWh

Battery Pack Configuration Options

Energy (kWh)	*Num of Modules*	*Num of Cells*	*Module Ah*	*Mod Voltage (nominal/ Max)*	*Voltage nom/max*	*Peak Amps*	*Lbs/Kg*	*Motors to Match*
85.2	24	96	240	14.8 / 16.8	355 / 403	1800	1128 / 514	Tes / Casc
78.1	22	176	120	29.6 / 33.6	651 / 739	960	1034 / 471	Casc
74.6	21	84	240	14.8 / 16.8	310 / 352	1800	987 / 450	Tes / Casc
71.0	20	40	480	22.2 / 25.2	148 / 168	1800	940 / 428	H9HV
63.9	18	144	120	29.6 / 33.6	532 / 604	960	846 / 386	Casc
56.8	16	32	480	22.2 / 25.2	118 / 134	1800	752 / 343	H9
42.6	12	96	120	29.6 / 33.6	355 / 403	960	564 / 257	Tes / Casc
39.1	11	176	60	14.8 / 16.8	651 / 739	480	517 / 236	Casc
35.5	10	40	240	14.8 / 16.8	148 / 168	1800	470 / 214	H9
32.0	9	144	60	22.2 / 25.2	532 / 604	480	423 / 193	Casc
28.4	8	32	240	14.8 / 16.8	118 / 134	1800	376 / 172	H9
21.3	6	96	60	44.4 / 50.4	355 / 403	480	282 / 129	Casc

OX DRIVE **POWER**

Battery Pack Application Examples

OxDrive POWER 5.33 kWh

Battery Pack Configuration Options

Energy (kWh)	*Num of Modules*	*Num of Cells*	*Module Ah*	*Mod Voltage (nominal/ Max)*	*Voltage nom/max*	*Peak Amps*	*Lbs/Kg*	*Motors to Match*
117.2	22	176	180	29.6 / 33.6	651 / 739	1440	1474 / 665	Casc
95.9	18	144	180	29.6 / 33.6	532 / 604	1440	1206 / 544	Casc
85.2	16	96	240	22.2 / 25.2	355 / 403	1800	1072 / 484	Tes / Casc
74.6	14	168	120	44.4 / 50.4	621 / 705	960	938 / 423	Casc
74.6	14	84	240	22.2 / 25.2	310 / 352	1800	938 / 423	Tes / Casc
69.3	13	39	480	11.1 / 12.6	144 / 163	1800	871 / 393	H9HV
63.9	12	144	120	44.4 / 50.4	532 / 604	960	804 / 363	Casc
63.9	12	96	180	29.6 / 33.6	355 / 403	1440	804 / 363	Tes / Casc
53.3	10	40	360	14.8 / 16.8	148 / 168	1800	670 / 302	H9HV
53.3	10	30	480	11.1 / 12.6	111 / 126	1800	670 / 302	H9
42.6	8	96	120	44.4 / 50.4	355 / 403	960	536 / 242	Tes / Casc
42.6	8	32	360	14.8 / 16.8	118 / 134	1800	536 / 242	H9
37.3	7	168	60	88.8 / 100.8	621 / 705	480	469 / 212	Casc
32.0	6	36	240	22.2 / 25.2	133 / 151	1800	402 / 182	H9HV
32.0	6	144	60	88.8 / 100.8	532 / 604	480	402 / 182	Casc
26.6	5	40	180	29.6 / 33.6	148 / 168	1440	335 / 151	H9HV
26.6	5	30	240	22.2 / 25.2	111 / 126	1800	335 / 151	H9
21.3	4	32	180	29.6 / 33.6	118 / 134	1440	268 / 121	H9

OX DRIVE **ENERGY** **2.2kWh**

MODULE SPECIFICATIONS

OXDE 2.2kWh 14.8v // 4 Cells in Series // 4s1p

PARAMETER	MIN	Nominal/Cont	MAX	UNIT
2.22kWh 151ah OXDE		4		Cells in Series
Module voltage	12.0	14.8	17.2	Vdc
Cell Voltage	3.0	3.7	4.3	Vdc
Discharge Current	-	225*	600(10s)*	Amps
Charger Current	-	150*	200(10s)*	Amps
Module Energy	2200	2234	-	Watt-Hours

*SOC and Temperature Dependant See PG#..

OXDE 2.2kWh 22.2v // 6 Cells in Series // 6s1p

PARAMETER	MIN	Nominal/Cont	MAX	UNIT
2.22kWh 102ah OXDE		6		Cells in Series
Module voltage	18.0	22.2	25.8	Vdc
Cell Voltage	3.0	3.7	4.3	Vdc
Discharge Current	-	150*	410(10s)*	Amps
Charger Current	-	100*	150(10s)*	Amps
Module Energy	2200	2242	-	Watt-Hours

*SOC and Temperature Dependant See PG#..

OX Drive ENERGY Temperatures (see PG#.. for more detailed specs)

Parameter	Min	Max	Unit
Discharge Temp	-30	55	C
Charging Temp	-20	55	C
Optimal Discharge Performance	30	48	C
Optimal Charge Performance	0	48	C

OX Drive ENERGY Mechanical and Density(see PG#.. for more detailed specs)

Weight	25/11.2 Lb/kg
Dimensions	(14.02/ 356)L x (5.98/152)W x (4.3/109)H (INCH/MM)
Energy Density	201 Wh/kg

OX DRIVE ENERGY
CELL SPECIFICATIONS

OXDE 151Ah 3.7vdc

PARAMETER	MIN	Nominal/Cont	MAX	UNIT
Capacity at 25C	-	4	-	Cells in Series
Cell voltage	12.0	14.8	17.2	Vdc
DC Resistance	3.0	3.7	4.3	Vdc
Pulse Charge Current for 10s	-	225*	600(10s)*	Amps
Pulse Discharge Current 10s	-	150*	200(10s)*	C
Module Energy	2200	2234	-	Watt-Hours

*SOC and Temperature Dependant See PG#..

OXDE 102Ah 3.7vdc

PARAMETER	MIN	Nominal/Cont	MAX	UNIT
Capacity at 25C	102	-	-	Ah @ 1C
Cell voltage	3.0	3.7	4.3	Vdc
DC Resistance	-	1.1	-	mohm
Pulse Charge Current for 10s	-	-	300	Amps
Pulse Discharge Current 10s	-	-	400	Amps
Module Energy	2200	2242	-	Watt-Hours

*SOC and Temperature Dependant See PG#..

OX Drive ENERGY Temperatures (see PG#.. for more detailed specs)

Parameter	Min	Max	Unit
Discharge Temp	-30	55	C
Charging Temp	-20	55	C
Storage Temp	-40	60	C

OX Drive ENERGY Density(see PG#.. for more detailed specs)

Weight	1.7kg
Volumetric Density	490Wh/L
Energy Density	228 Wh/kg

OX Drive ENERGY GB/T 31485-2015

Over-Charge	Pass
Short	Pass
Crush	Pass

Cell Safety Features and Testing

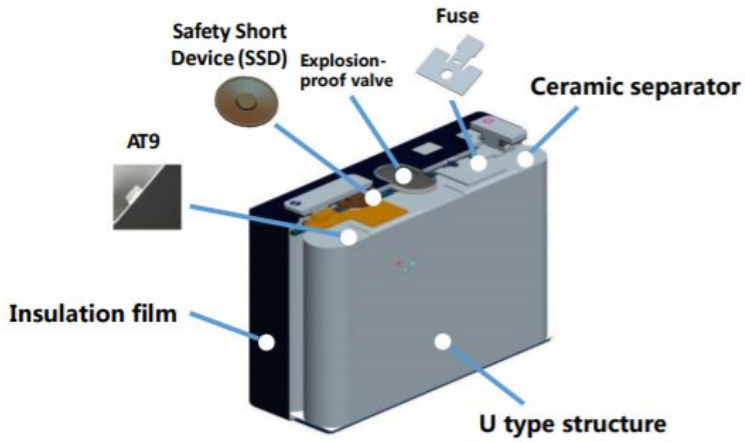

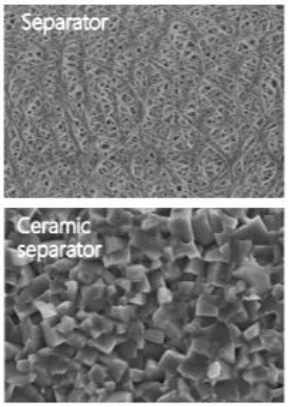

Test Item	Safety Design Solution
Over charge	High pressure gas additive + Safety short circuit device (SSD)+Fuse
External short circuit	Fuse
Internal short circuit	Ceramic side cathode(AT9)+ceramic separator+special processing
Crush	U type structure + High strength AL case
Heat	Electrolyte additive + Ceramic separator

NO.	Abuse Test	GBT 31485-2015	Result
1	Over-Charge	-100%SOC, RT -1C charge 1h or cell voltage reaches 1.5 times of charging limit voltage	No Fire, No explosion
2	Over-Discharge	-100%SOC, RT -1C DC 90min, rest 1h	No Fire, No explosion
3	Crush	-100%SOC, RT -Φ150mm crush head, crush to 30% displacement or crush force reaches to 200KN	No Fire, No explosion
4	Hotbox	-100%SOC, RT -Heating from RT to 130°C at the rate of 5°C/min, keep 130°C for 30min	No Fire, No explosion
5	Short	-100%SOC, RT -External resistance less than 5mohm, hold short circuit for 10min	No Fire, No explosion
6	Drop	-100%SOC, RT -Drop to concrete floor with both terminal downward from 1.2m height, 1h observation	No Fire, No explosion

OX DRIVE ENERGY CELL Performance Graphs

151Ah Performance Graphs

(Pending Availability)

OX DRIVE ENERGY CELL Performance Graphs

102Ah Performance Graphs

◆ **Test Procedures:** 25℃/45℃/60℃, 0.5C/1C CC+CV to 4.3V, rest 0.5h, 1C DC to 2.8V, rest 0.5h (3000N)

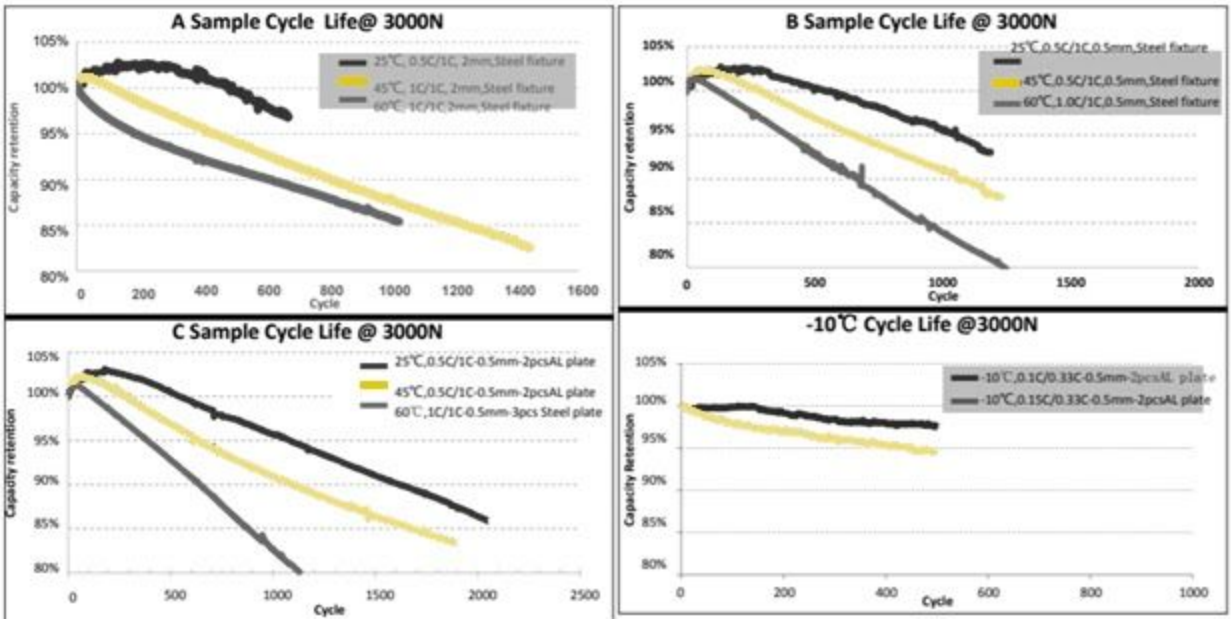

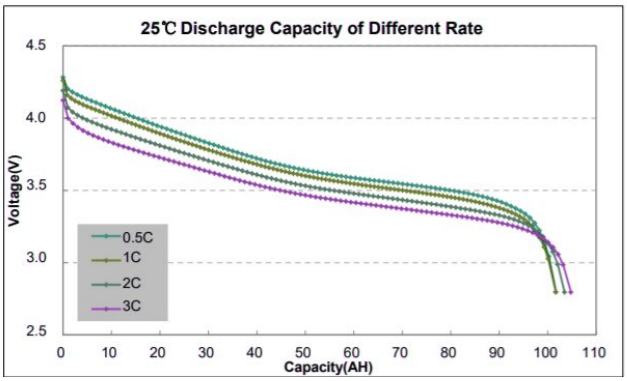
25℃ Discharge Capacity of Different Rate
Voltage(V)
Capacity(AH)
0.5C
1C
2C
3C

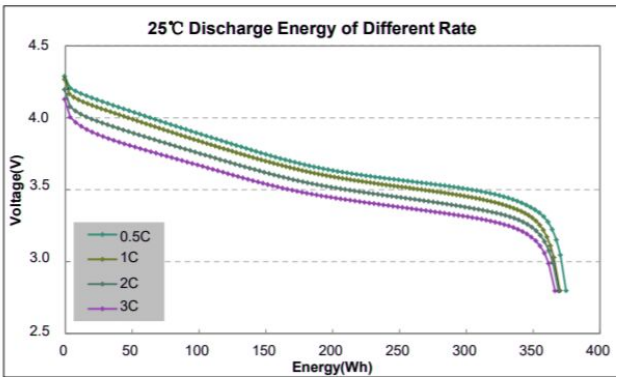
25℃ Discharge Energy of Different Rate
Voltage(V)
Energy(Wh)
0.5C
1C
2C
3C

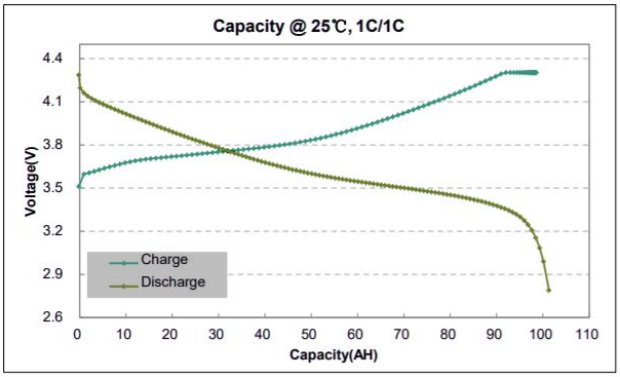
Capacity @ 25℃, 1C/1C
Voltage(V)
Capacity(AH)
Charge
Discharge

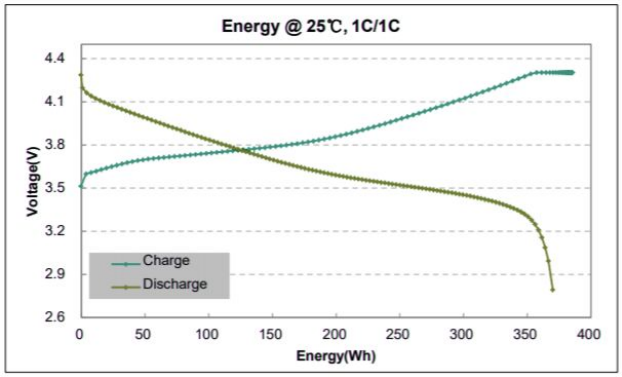
Energy @ 25℃, 1C/1C
Voltage(V)
Energy(Wh)
Charge
Discharge

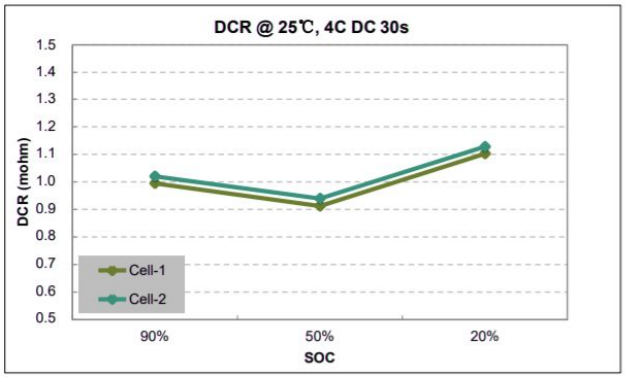
DCR @ 25℃, 4C DC 30s
DCR (mohm)
SOC
90%
50%
20%
Cell-1
Cell-2

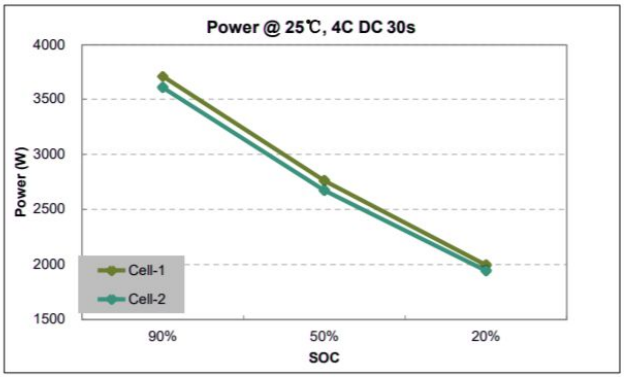
Power @ 25℃, 4C DC 30s
Power (W)
SOC
90%
50%
20%
Cell-1
Cell-2

OX DRIVE **POWER**

MODULE SPECIFICATIONS

OXDP 2.66kwh Module Specs:

The 2.66kWh OXDP Modules come in several configurations:

Num of Cells	***Module Ah***	***Mod Voltage (nominal/ Max)***	***Peak Amps***	***Lbs/Kg***
12	60	44.4 / 50.4	480	33 / 15
6	120	22.2 / 25.2	960	33 / 15
4	180	14.8 / 16.8	1440	33 / 15
3	240	11.1 / 12.6	1800	33 / 15
2	360	7.4 / 8.4	1800	33 / 15

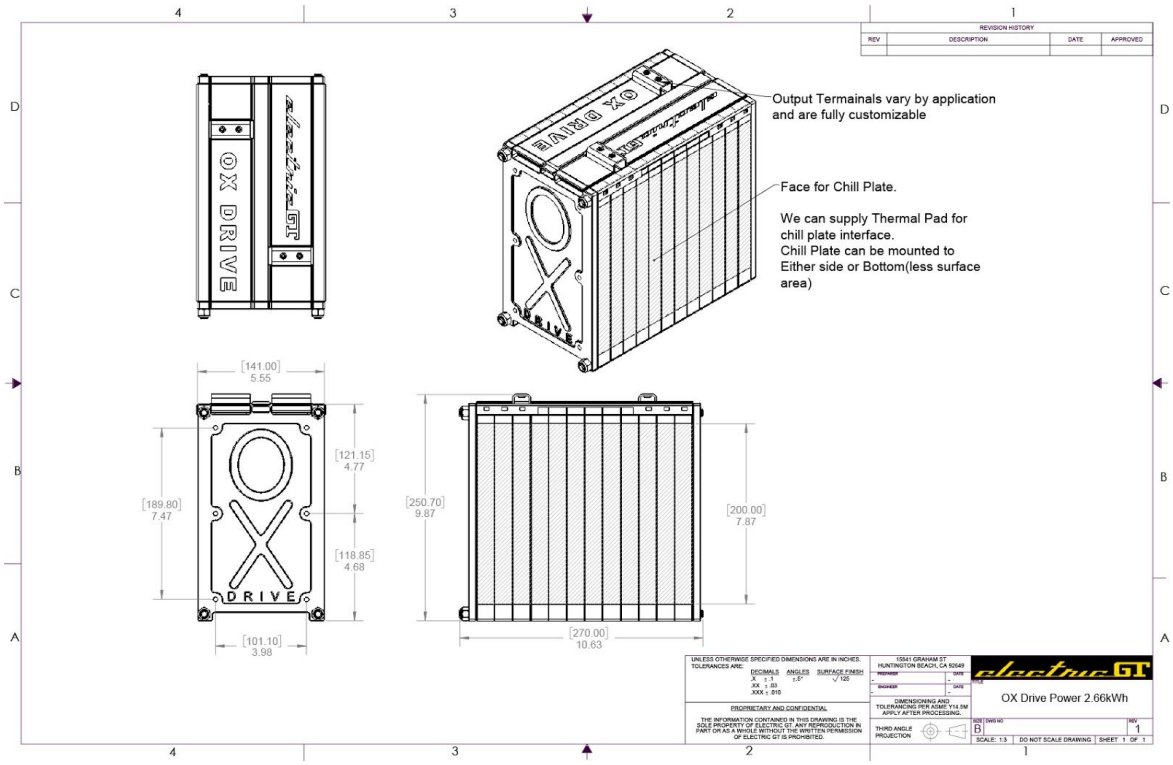

OX DRIVE **POWER**

MODULE SPECIFICATIONS

OXDP 3.55kwh Module Specs:

The 3.55kWh OXDP Modules come in several configurations:

Num of Cells	***Module Ah***	***Mod Voltage (nominal/ Max)***	***Peak Amps***	***Lbs/Kg***
16	60	59.2 / 67.2	480	47 / 22
8	120	29.6 / 33.6	960	47 / 22
4	240	14.8 / 16.8	1800	47 / 22
2	480	7.4 / 8.4	1800	47 / 22

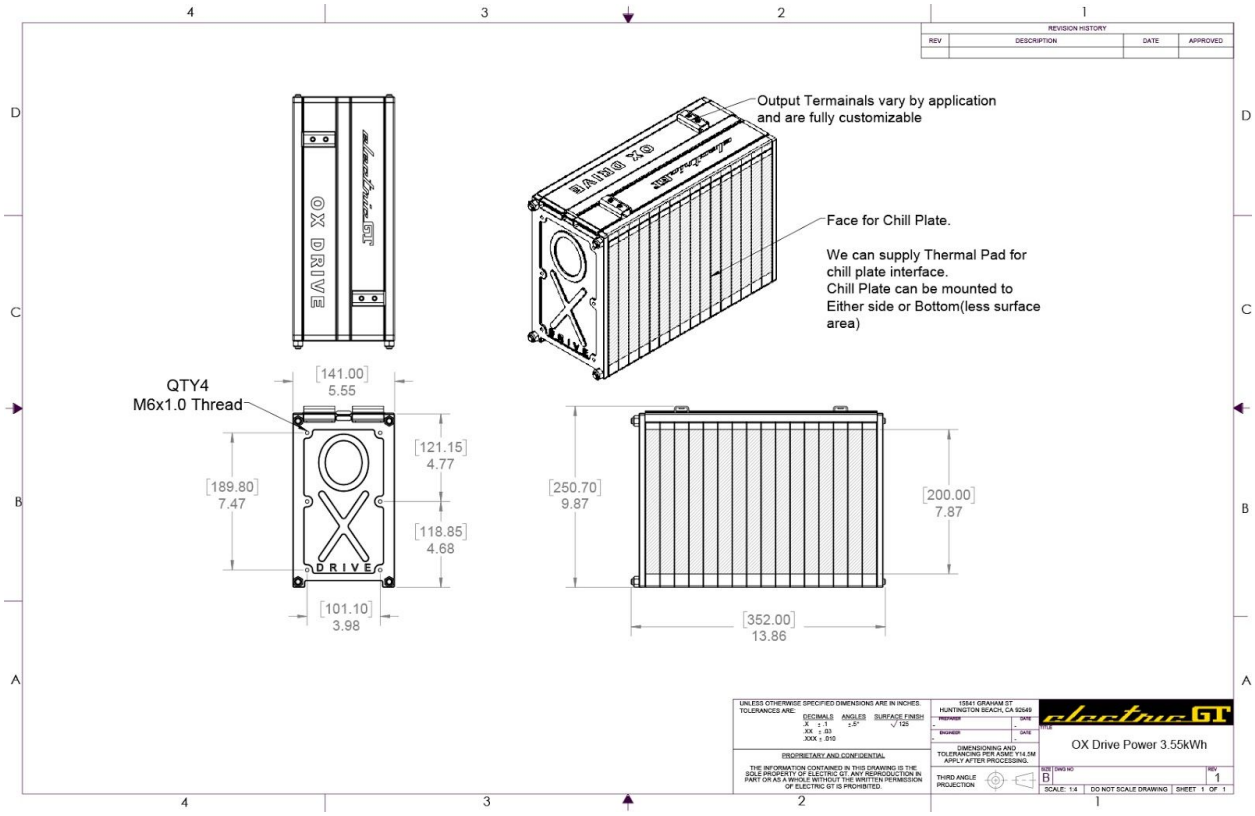

OX DRIVE **POWER**

MODULE SPECIFICATIONS

OXDP 5.33kwh Module Specs:

The 5.33kWh OXDP Modules come in several configurations:

Num of Cells	***Module Ah***	***Mod Voltage (nominal/ Max)***	***Peak Amps***	***Lbs/Kg***
24	60	88.8 / 100.8	480	67 / 31
12	120	44.4 / 50.4	960	67 / 31
8	180	29.6 / 33.6	1440	67 / 31
6	240	22.2 / 25.2	1800	67 / 31
4	360	14.8 / 16.8	1800	67 / 31
3	480	11.1 / 12.6	1800	67 / 31

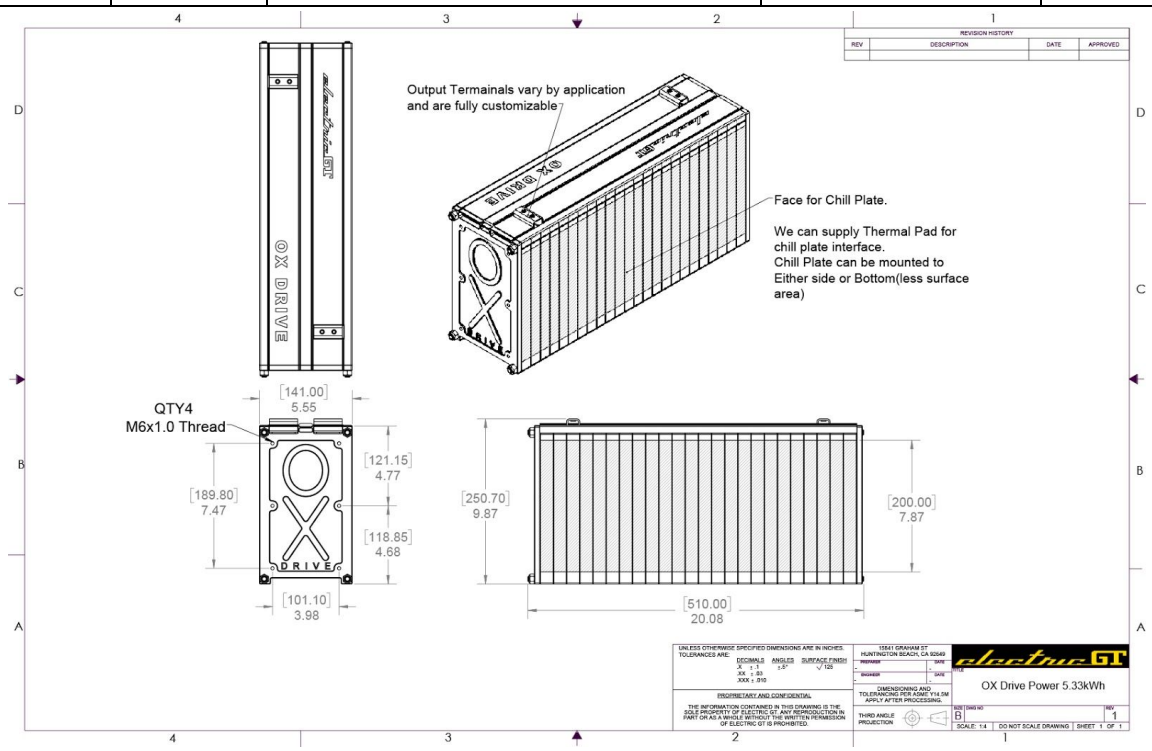

OX DRIVE **POWER**

CELL SPECIFICATIONS

OXDP 30 ah Cell Specification:

OXDP 30Ah 3.7vdc

PARAMETER	MIN	Nominal/Cont	MAX	UNIT
Capacity at 25C	30	-	-	Ah @ 0.3C
Cell voltage	3.0	3.7	4.2	Vdc
DC Resistance	-	0.75	-	mohm
Pulse Charge Current for 10s	-	60	90	Amps
Pulse Discharge Current 10s	-	120	400	Amps
Cell Energy	110	111	-	Watt-Hours

*SOC and Temperature Dependant See PG#..

OX Drive POWER Temperatures (see PG#.. for more detailed specs)

Parameter	Min	Max	Unit
Discharge Temp	-20	55	C
Charging Temp	-0	45	C
Storage Temp	-40	60	C

OX Drive POWER Density(see PG#.. for more detailed specs)

Weight	525g
Volumetric Density	-
Energy Density	211 Wh/kg

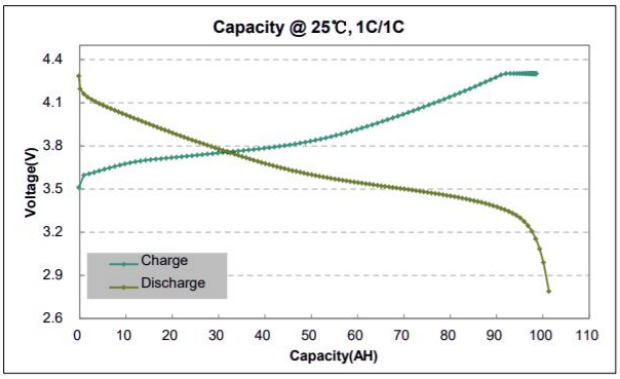

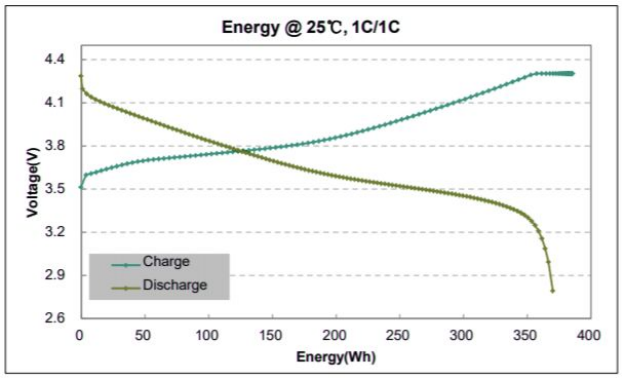

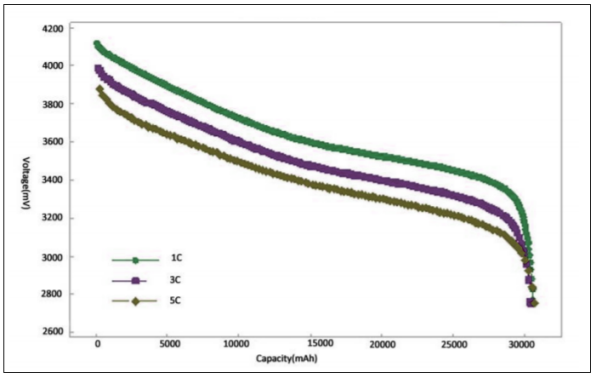

25°C continuous discharge 1C, 3C, 5C

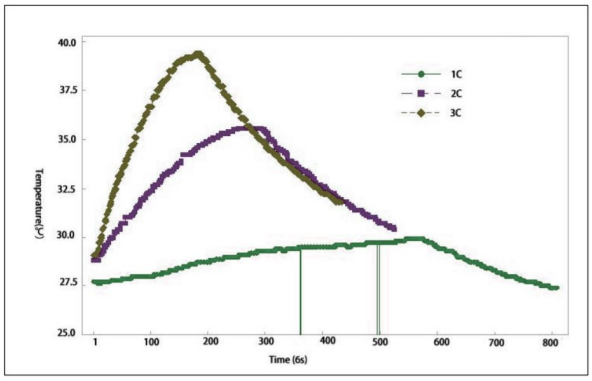

Test Procedures: Temperature rise less than 7°C at continuous 2C charge rate, 11°C at continuous 3C charge rate

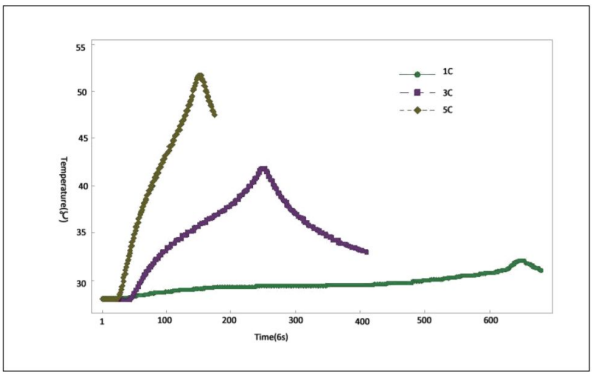

Test Procedures: Temperature rise less than 15°C at 3C continuous discharge rate, temperature rise less than 25°C at 5C continuous discharge rate

Test Procedures: 55°C & -20°C discharge performance

NO.	Abuse Test	GBT 31485-2015	Result
1	Over-Charge	-100%SOC, RT -1C charge 1h or cell voltage reaches 1.5 times of charging limit voltage	No Fire, No explosion
2	Over-Discharge	-100%SOC, RT -1C DC 90min, rest 1h	No Fire, No explosion
3	Crush	-100%SOC, RT -Φ150mm crush head, crush to 30% displacement or crush force reaches to 200KN	No Fire, No explosion
4	Hotbox	-100%SOC, RT -Heating from RT to 130°C at the rate of 5°C/min, keep 130°C for 30min	No Fire, No explosion
5	Short	-100%SOC, RT -External resistance less than 5mohm, hold short circuit for 10min	No Fire, No explosion
6	Drop	-100%SOC, RT -Drop to concrete floor with both terminal downward from 1.2m height, 1h observation	No Fire, No explosion

OX DRIVE **POWER/ENERGY**

BATTERY SYSTEM ACCESSORIES

Electric GT Energy & Power Modules require multiple product integration for proper application use. The OX-Drive Modules are designed to pair with EGT's Engineered Enclosures, Thermal Management Systems, Battery Management Systems, and Electrical Connection Hardware to make a complete power solution that provides years of safe and reliable performance.

BATTERY ENCLOSURES

In addition to offering modules for industry use, Electric GT provides battery enclosure design, engineering and build services to support Plug & Play format EV systems. OX-Drive Energy & Power Modules enable a wide variety of size and space fitment solutions in addition to a wide variety of energy configurations.

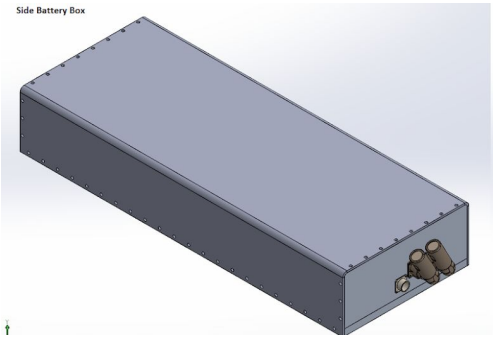

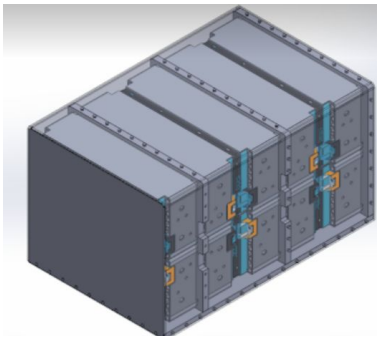

Battery Enclosure Systems

BATTERY THERMAL MANAGEMENT SYSTEM (TMS)

Electric GT offers a fully integrated TMS Suite of Products to address proper Battery Thermal Management. Both core Products and Systems are available to support the EV industry. Battery Chill Plates, Thermal Pads, and Coolant Systems are available through Electric GT.

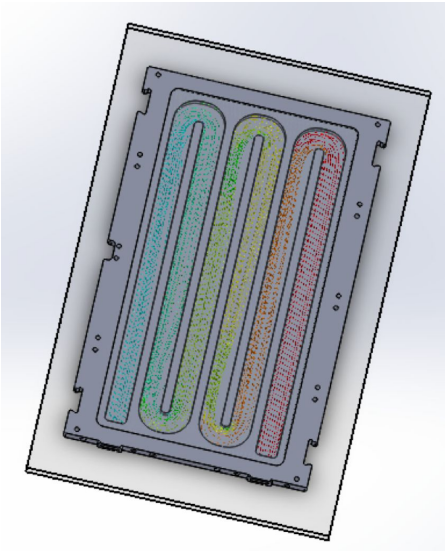

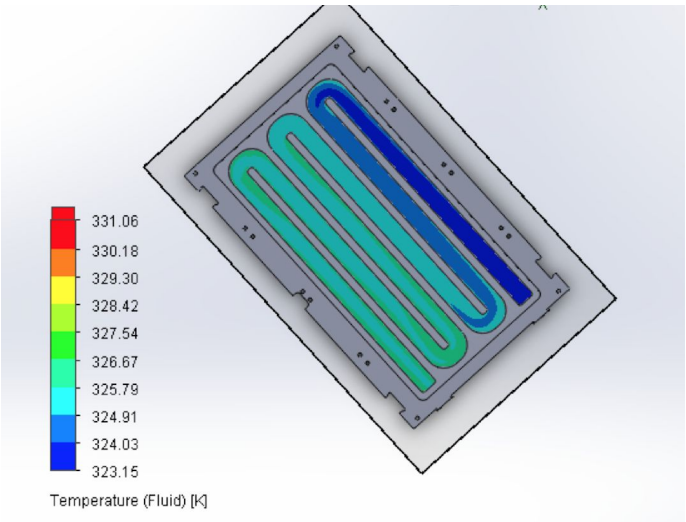

BATTERY MANAGEMENT & CONTROL SYSTEMS (BMS)

EGT offers a BMS solutions for EV systems and ensures no systems are built without using properly installed BMS.

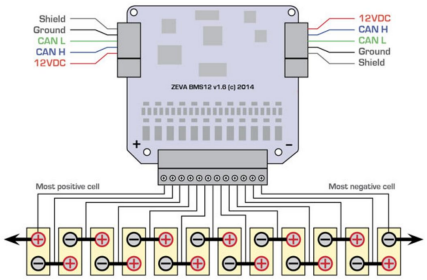

BMS Solutions

ELECTRICAL HARDWARE

OX-Drive Batteries are supported with EGT Buss Bars and Touch Proof Connectors.

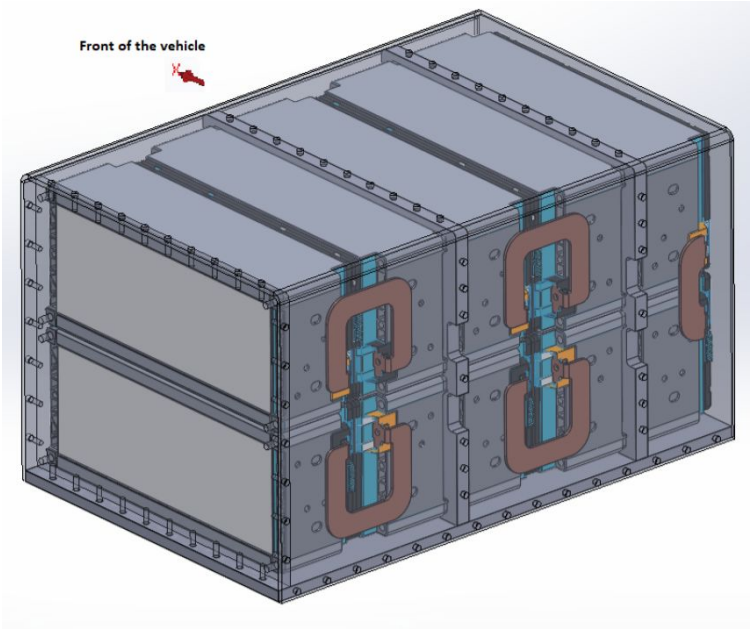

Contact Info@ElectricGT.com for information and orders.

OX DRIVE Power vs. LG Chem 60v

OX-Drive Power modules are superior, band NEW and covered under warranty! The OX-Power modules are more energy and volumetrically dense and are available in many configurations. THis is the new solution to unsafe parallelling of battery modules for your project (see Applications pages). OXDP provides a stable supply chain for projects needing to depend on both performance and reliable availability.

VS

Parameter	LG Chem 60v	OX Drive Power	Oxdrive Advantage
Energy	2.66kWh	2.66, 3.55, 5.33kWh	Highly Configurable.
Weight	38lbs	33 /47/67 lbs	@15% LESS
Energy Density			15% improvement
Dimensions	14.25x8x6.25”	2.66= 10.63x9.87x5.55	Smaller!
Pulse Discharge(10s)	800amps(unverified)	Up to 1800amps	44% improvement
Availability	Not Available/Used	Stable supply	New & Available
eGT-Chill Plates	NO	YES	Design Flexibility
Custom ConfigOptions	NO	YES	Clear!